7.3 Tool Holder Dimensions

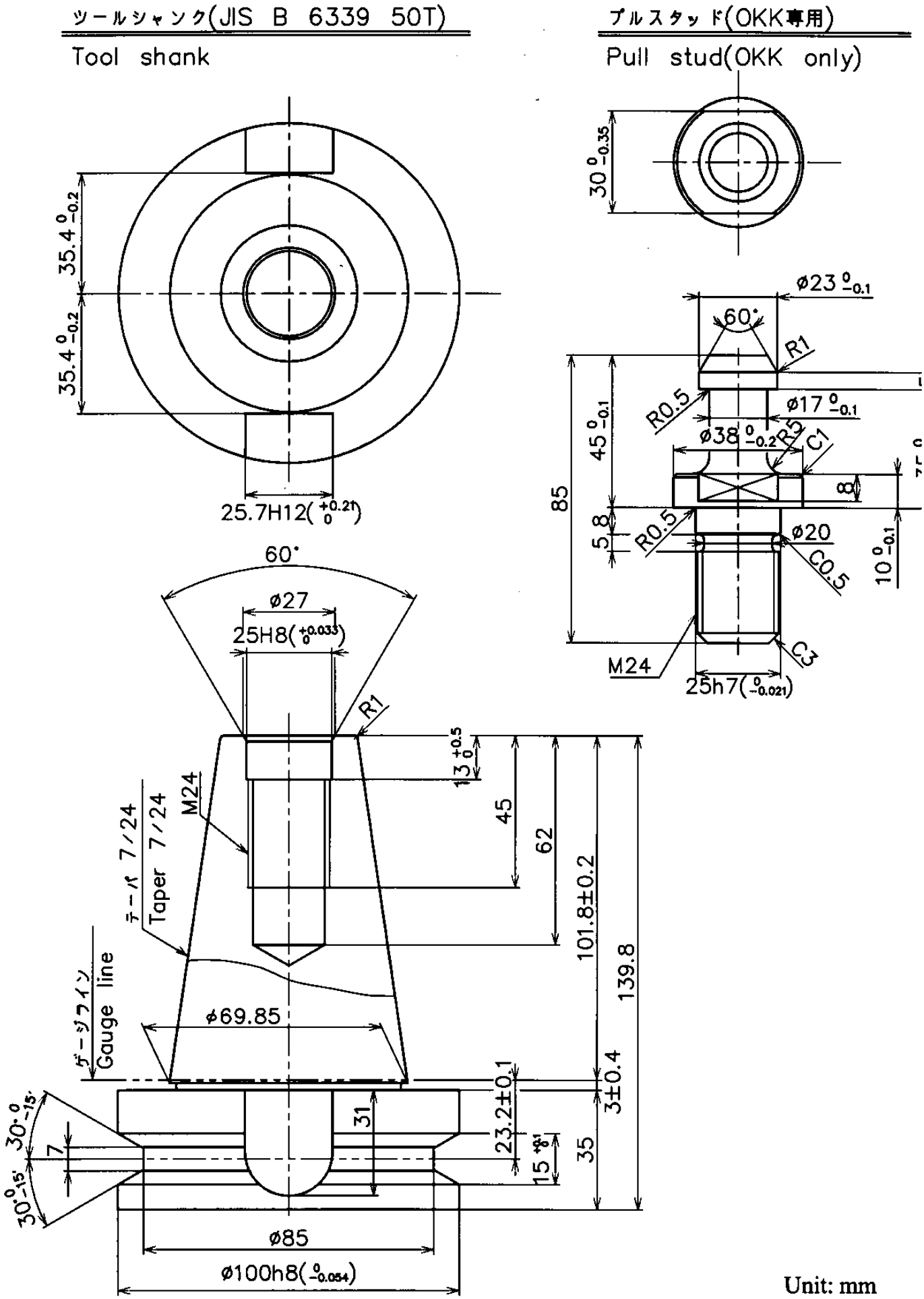

Unit: mm