2.5 Foundation Drawing for Installation

[Foundation and Installation]

To maintain machine precision and prevent vibration, pay special attention to the following.

1. The foundation should be rugged enought to maintain safety and horizontality for the machine weight according to the ground for installation place.
   (Nominal strength: 23 MPa or larger)
2. The foundation concrete should be reinforced with rainforcing bars arranged as appropriate so that it may sufficiently withstand the machine weight.
3. The foundation concrete should be cured for 4 weeks.
4. When installing the machine, set leveling blocks for leveling, centering and to prevent oscillation as shown in the drawing, and adjust and secure with foundation bolts.
   Periodically check that they stay in proper position and condition.
5. The ground soil bearing power required should be 0.06 MPa or more.
6. When the nature of the soil and soil bearing capacity are unfovorable, datermine the pile size and number of piles accordingly for installation.
7. Drill each anchor hole in position within ±10 mm from the reference anchor hole.
8. Avoid the anchor hole position to embed the rainforcement.
9. For the bond anchor procedure, refer to the "2.4 Anchor Bolt Embedding Work Procedure" in the foundation and installation manual.

Note: Customaer should prepare the folloing band as the time of anchor hole processing.
Band E200 (Konishi Co., Ltd.)
Required amount: 2.0kg

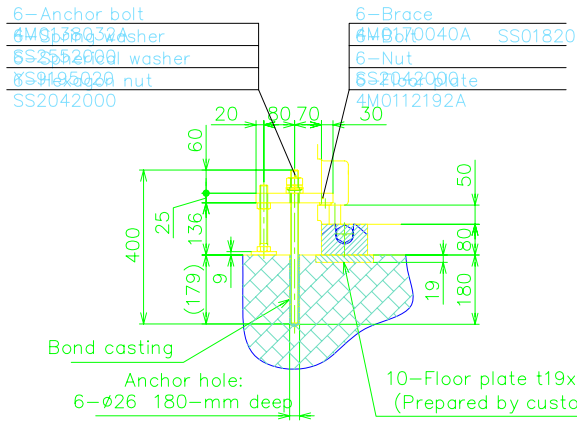

Details of Anchoring Part

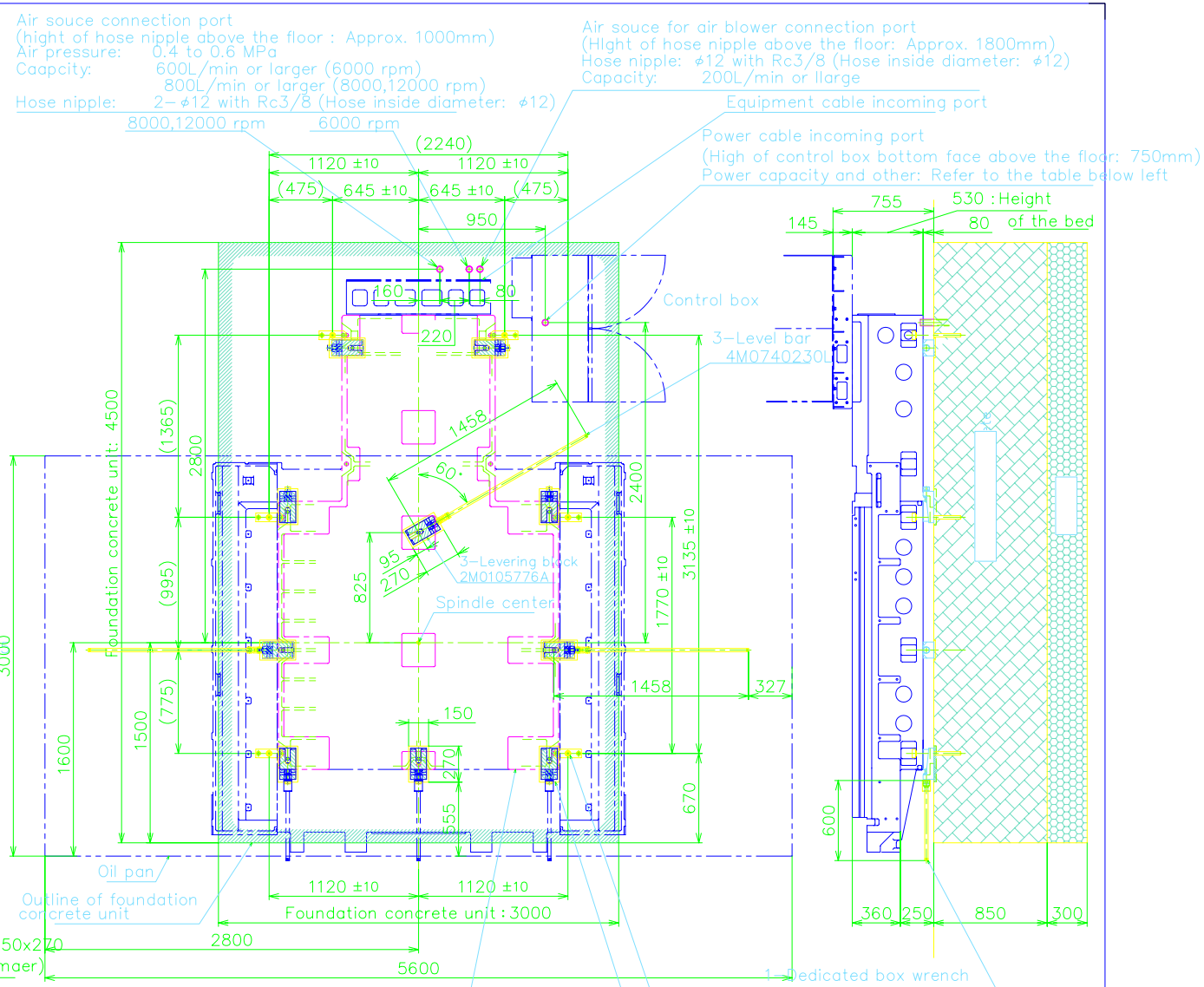

Floor plate, 10 sheets
Material: SS400P or equivalent
(To be prepared by customer)

[Power Capacity]

		[Spindle Motor] Capacity		
		6000/8000 rpm		12000 rpm
		18.5/22 kW	22/26 kW	22/30 kW
Controller maker	MITSUBISHI	61 kVA	67 kVA	74 kVA
	FANUC	53 kVA	59 kVA	64 kVA
Size of power supply cable	MITSUBISHI	60 mm²	80 mm²	80 mm²
	FANUC	50 mm²	60 mm²	60 mm²
Grounding		Class D (Max. 100Ω) Cable size equal to the power cable		

VM900	SPLASH GUARD	21–1

MA62566A : OKK–USA

REF: 0170FD011A

1 : 30

S–GUADE

MC0170FD014A